TERA®-MAX® Patch Panel

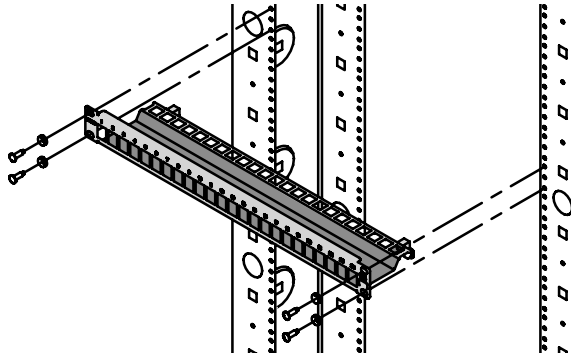

1

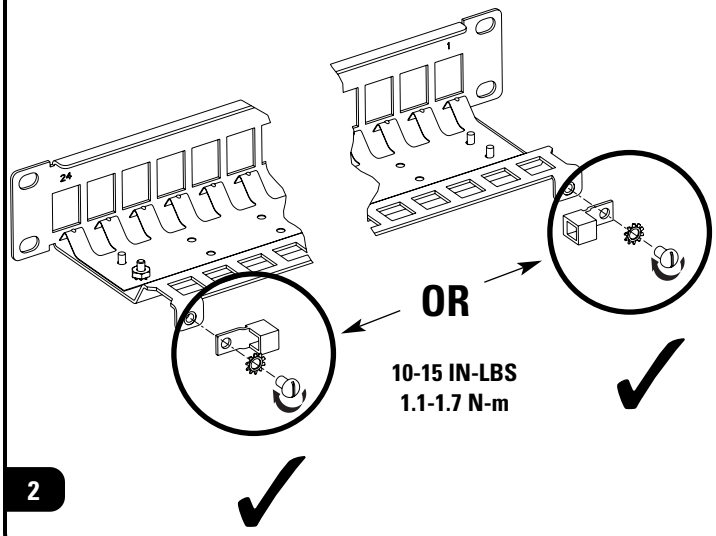

2

TERA

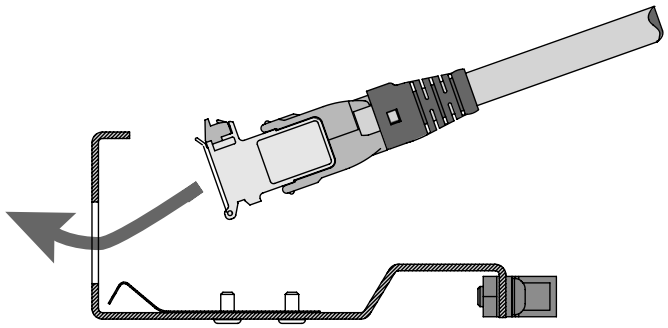

3A Front assembly

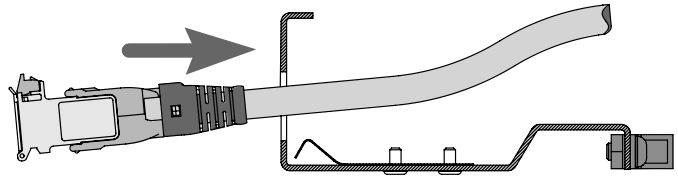

3B Rear assembly

MAX

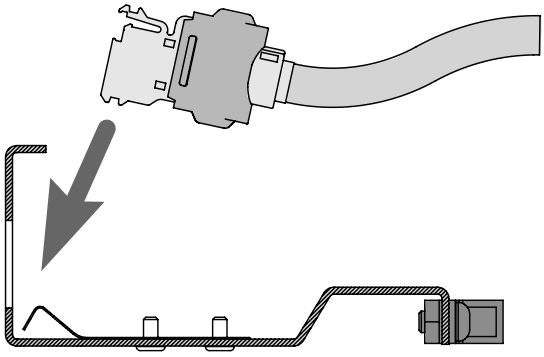

3

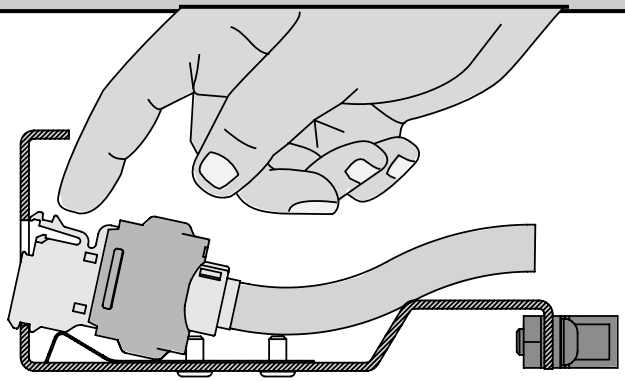

4

TERA™ - MAX™ Patch Panel

TERA

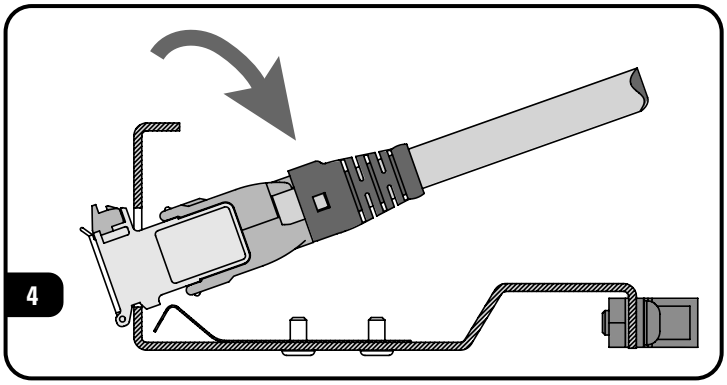

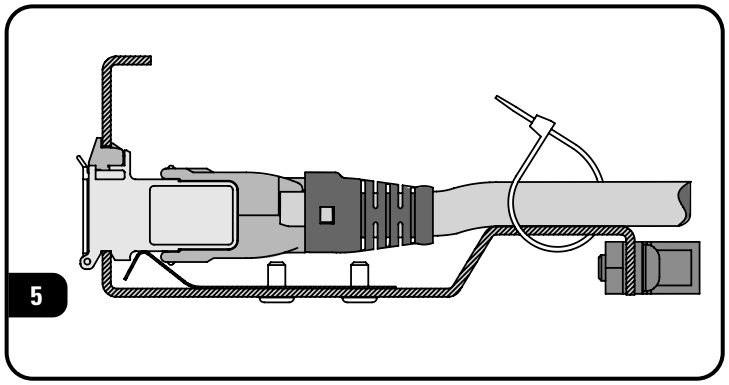

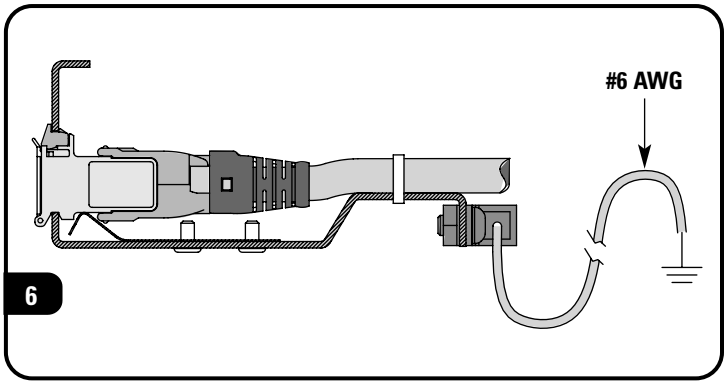

MAX

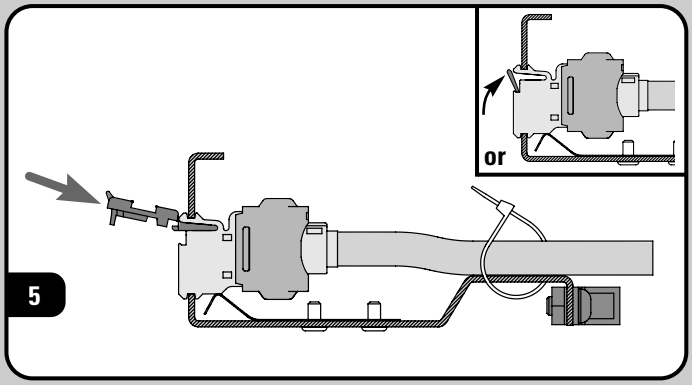

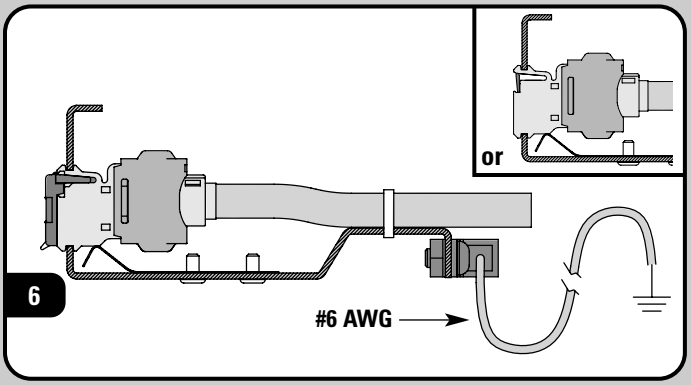

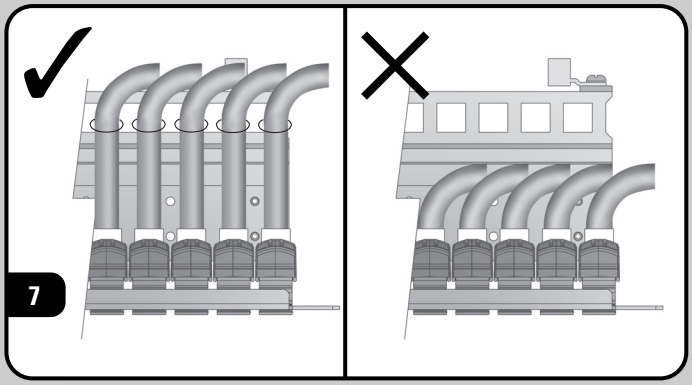

To assist safe installations, comply with the following:

A. Use caution when installing or modifying telecommunications circuits.

B. Never touch uninsulated wire terminals unless the circuit has been disconnected.

C. Never install this device in a wet location.

D. Never install wiring during a lightning storm.

c UL US LISTED

UL

c UL

Rev. B 07/07 100.14974

Global Headquarters
Watertown, Connecticut USA
Tel: (1) 866-548-5814

For a complete listing of our global offices visit our web site

SIEMON™
www.siemon.com

© 2007 Siemon